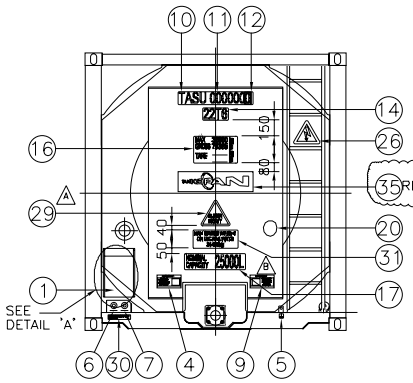

REAR VIEW

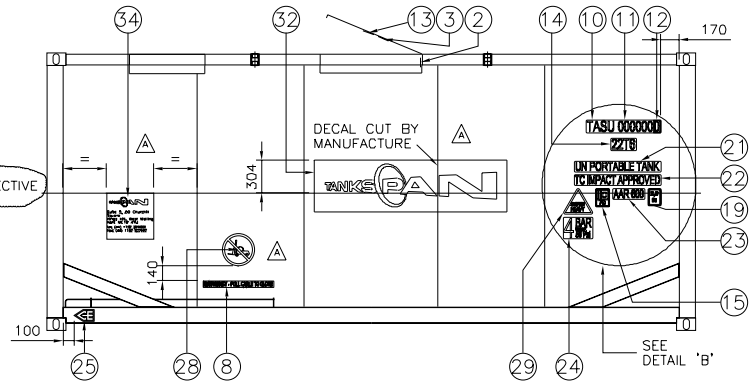

SIDE VIEW

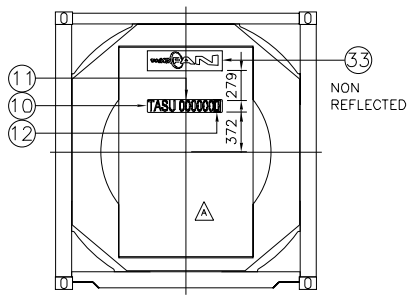

FRONT VIEW

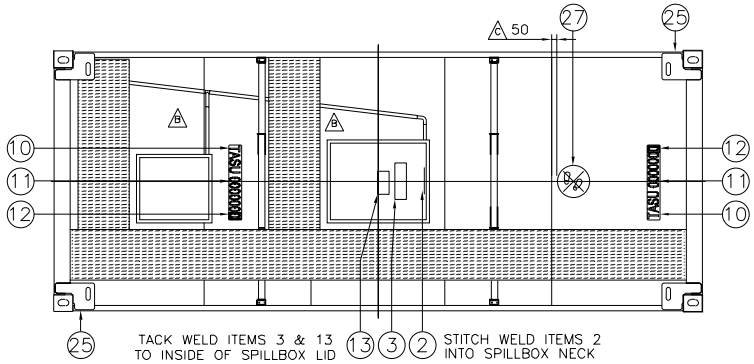

PLAN ON TANK

PARTS LIST

No.	QTY	MAT	BOP Pg/No	DESCRIPTION	REFERENCE
1	1			GENERAL DATA PLATE	2442-02-1204
2	1		8087	MANUFACTURER PLATE	CSTD 105
3	1			CALIBRATION PLATE (CM/LITERS)	CSTD 2086
4	1			'RAISE LOCKING LEVER' DECAL	
5	1		12177	EARTH DECAL	
6	1		12174	'IN' DECAL FOR STEAM TUBE INLET	
7	1		12175	'OUT' DECAL FOR STM. TUBE OUTLET	
8	1		12178	REMOTE CONTROL DECAL	
9	1			'FOOTVALVE MUST BE CLOSED' DECAL	
10	6		12161	OWNER CODE	
11	6		12161	SERIAL NUMBER	
12	6		12161	ISO AUTO CONTROL NUMBER	
13	1			CALIBRATION PLATE (INCHES/US GALLONS)	CSTD 2087
14	3		12162	DIMENSION & TYPE	
15	2		12163	UIC APPROVAL DECAL	
16	1		12164	WEIGHT PANEL	
A 17	1		12171	NOMINAL CAPACITY	
18	1			OWNER PLATE	2442-02-1184
19	2		12181	MAX. HEIGHT DECAL	
20	1			INSPECTION AUTHORITY – BUREAU VERITAS	
21	2			UN PORTABLE TANK DECAL	
22	2		12168	TC IMPACT APPROVED DECAL	
23	2		12169	AAR 600 APPROVED DECAL	
24	2			WORKING PRESSURE DECAL	
25	2		12242	MANUFACTURERS PLACARD	
26	1		12173	OVERHEAD POWER LINE WARNING DECAL	
B 27	1			NO STEP DECAL	
28	2		12188	'NO FORKLIFT' DECAL	
A 29	3			"SUPER HEAVY" DECAL	
30	1		12243	"STEAM HEATING" DECAL	
31	1			UIC RAILWAYS DECAL (34 000KG)	
32	2			TANKSPAN OWNER LOGO LARGE DECAL	
33	1			TANKSPAN LOGO SMALL DECAL NON REFLECTED	
34	2			TANKSPAN ADDRESS LOGO DECAL	
35	1			TANKSPAN LOGO SMALL DECAL REFLECTED	

(8) EMERGENCY - PULL CABLE TO CLOSE

(25)

(28)

(26)

(30) THE TANK OPERATING TEMPERATURE MUST NOT EXCEED 130°C 266°F — WORDING IN RED (A)

(6) STEAM MAWP INLET 6 BAR — WORDING IN RED (A)

(7) STEAM OUTLET — WORDING IN BLACK

(5) ITEMS 5 TO BE PASTED ON TOP OF BEAM

(16) MAX 36000 kg / GROSS 79365 lb / TARE ___ kg / ___ lb — Q.C. TO WEIGH FIRST TANK TO ESTABLISH TARE MASS (A)

(17) NOMINAL CAPACITY 25000L

(31) MAX GROSS WEIGHT ON UIC RAILWAYS 34 000kg — WORDING IN BLACK DECAL IN YELLOW (A)

DETAIL 'B'

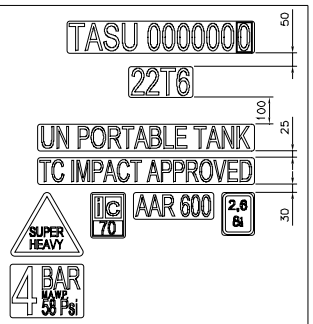

(9) IMPORTANT!

(4) IMPORTANT!

(11) (10) TASU 0000000 (12)

(19) 2,6 Si

(24) 4 BAR MAWP 58 Psi

(29) SUPER HEAVY

(22) TC IMPACT APPROVED

(15) UIC 70

(21) UN PORTABLE TANK

(23) AAR 600

(14) 22T6

P Number	Serial Number	P Number	Serial Number
29780	TASU 215066-7	29777	TASU 215093-9
29781	TASU 215067-2	31190	TASU 215094-4
29782	TASU 215068-8	31191	TASU 215095-0
29783	TASU 215069-3	31192	TASU 215096-5
29784	TASU 215070-7	31193	TASU 215097-0
29785	TASU 215071-2	31194	TASU 215098-6
29786	TASU 215072-8	31195	TASU 215099-1
29787	TASU 215073-3	31196	TASU 215100-4
29788	TASU 215074-9	31197	TASU 215101-0
29789	TASU 215075-4	31198	TASU 215102-5
29790	TASU 215076-0	31199	TASU 215103-0
29791	TASU 215077-5	31200	TASU 215104-6
29792	TASU 215078-0	31201	TASU 215105-1
29793	TASU 215079-6	31202	TASU 215106-7
29794	TASU 215080-0	31203	TASU 215107-2
29795	TASU 215081-5	31204	TASU 215108-8
29796	TASU 215082-0	31205	TASU 215109-3
29797	TASU 215083-6	31206	TASU 215110-7
29798	TASU 215084-1	31207	TASU 215111-2
29799	TASU 215085-7	31208	TASU 215112-8
29800	TASU 215086-2	31209	TASU 215113-3
29801	TASU 215087-8	31210	TASU 215114-9
29802	TASU 215088-3	31211	TASU 215115-4
29803	TASU 215089-9	31225	TASU 215116-0
29804	TASU 215090-2	29806	TASU 215092-3
29805	TASU 215091-8		

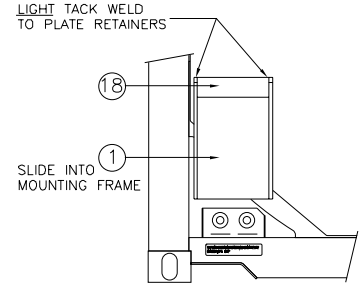

DETAIL 'A'

REVISION E				REVISION D				REVISION C				REVISION B				REVISION A			
AUTHORITY	SIGN.	DATE	DESCRIPTION	AUTHORITY	SIGN.	DATE	DESCRIPTION	AUTHORITY	SIGN.	DATE	DESCRIPTION	AUTHORITY	SIGN.	DATE	DESCRIPTION	AUTHORITY	SIGN.	DATE	DESCRIPTION
DRAWN				DRAWN				DRAWN	R.R	18/03/02	ITEM 27 REPOS.	DRAWN	R.R	12/03/02	ITEM 4 & 9 REPOS. & ITEM 27 DYT CHANGED	DRAWN	R.R	07/03/02	ITEM 17 & 29 QTY. REVISED ITEM 5, 16, 30 & 31 DECAL REVISED
DESIGN				DESIGN				DESIGN				DESIGN	S.E	12/03/02		DESIGN	S.E	07/03/02	
QUALITY ASSURANCE				QUALITY ASSURANCE				QUALITY ASSURANCE				QUALITY ASSURANCE				QUALITY ASSURANCE			
CONTRACTS				CONTRACTS				CONTRACTS				CONTRACTS	A.L	12/03/02		CONTRACTS	A.L	07/03/02	
INSPECTION AUTHORITY				INSPECTION AUTHORITY				INSPECTION AUTHORITY				INSPECTION AUTHORITY				INSPECTION AUTHORITY			

DRAWING APPROVAL		
AUTHORITY	SIGNATURE	DATE
DESIGN	S.E	14/02/02
QUALITY ASSURANCE		
CONTRACTS	A.L	14/02/02
INSPECTION AUTHORITY		
CLIENT		

	REQ'D TOL	NOMINAL DIMENSIONS (SHORT SIDE OF TRIANGLE) DEGREES & MINUTES: ABOVE 0 TO 315	ABOVE 315 TO 1000	ABOVE 1000	MM/M: ABOVE 0 TO 315	ABOVE 315 TO 1000	ABOVE 1000	NOMINAL DIMENSIONS: ABOVE 0 TO 120	ABOVE 120 TO 315	ABOVE 315 TO 1000	ABOVE 1000 TO 2000	ABOVE 2000 TO 4000	ABOVE 4000 TO 8000	ABOVE 8000
A	± 20'	± 15'	± 10'	± 6	± 4,5	± 3	± 1	± 1	± 2	± 3	± 4	± 4	± 6	
B	± 45'	± 30'	± 20'	± 13	± 9	± 6	± 2	± 2	± 3	± 4	± 6	± 8	± 10	
C	±1°	± 45'	± 30'	± 18	± 13	± 9	± 3	± 4	± 6	± 8	± 11	± 14	± 18	
D	±1°30'	±1°15'	±1°	± 26	± 22	± 18	± 4	± 7	± 9	± 12	± 16	± 21	± 27	
	DIN 8570 PART 1						FROM 0-30 TOLERANCE ± 1						DIN 8570 PART 3	

CONSANI ENGINEERING (PTY) LTD
ELSIES RIVER, CAPE
SOUTH AFRICA
TEL. 592-3400
FAX. 591-2825

INTERMODAL CONTAINERS

THIS DRAWING AND INFORMATION IS THE PROPERTY OF CONSANI ENG. (PTY) LTD AND MAY NOT BE REVEALED TO ANY THIRD PARTY WITHOUT OUR WRITTEN PERMISSION.

CAD: 24422357c

TANK MARKINGS
51 x 25 000 LITRE HO3 TANK

CLIENT	OCI	SCALE	1:25	DRAWING NUMBER	REVISION
		DRAWN	RASHAAD	2442-02-2357	C
WORKS ORDER	2442	CHECKED			
		DATE	14/02/02		